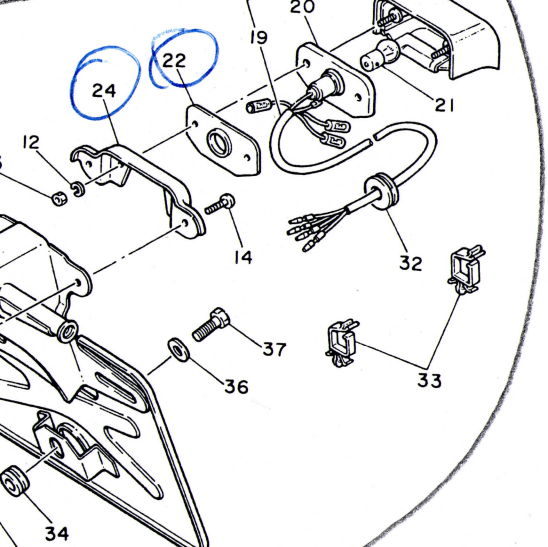

14	92506-06016	SCREW, Pan head
15	90201-06067	WASHER, Plate
16	95306-06600	NUT
17	4G7-84745-40	LICENCE LIGHT UNIT ASSY
18	1H2-84743-41	•COVER, license light
19	4G7-84712-40	•CORD ASSY
20	1A8-84742-60	•SEAT, base
21	*	BULB (12V-5W)
22	1A8-84746-60	PLATE, seat base
23	4G7-84751-40-33	BRACKET, licence
24	4G7-84758-00	STAY, licence bracket
25	4G7-84753-00	DAMPER
26	4G7-84757-00	COLLAR, licence bracket
27	90201-06067	WASHER, Plate
28	97306-06035	BOLT